2020 Annual Meeting – Air Movement Division

November 2, 2020

Marcel Kamutzki

AMCA Air Movement Division Chair

1. Call to Order

2. Roll Call

The GoToWebinar registration list will serve as the attendee roll call.

3. AMCA International Policies and Guidelines

Available on AMCAConnect:
https://www.amcaconnect.org/home/myamca/members-handbook-details

4. Adoption of Agenda

The agenda will be adopted by consensus. Please raise your hand on your control panel if you have any additions or objections.

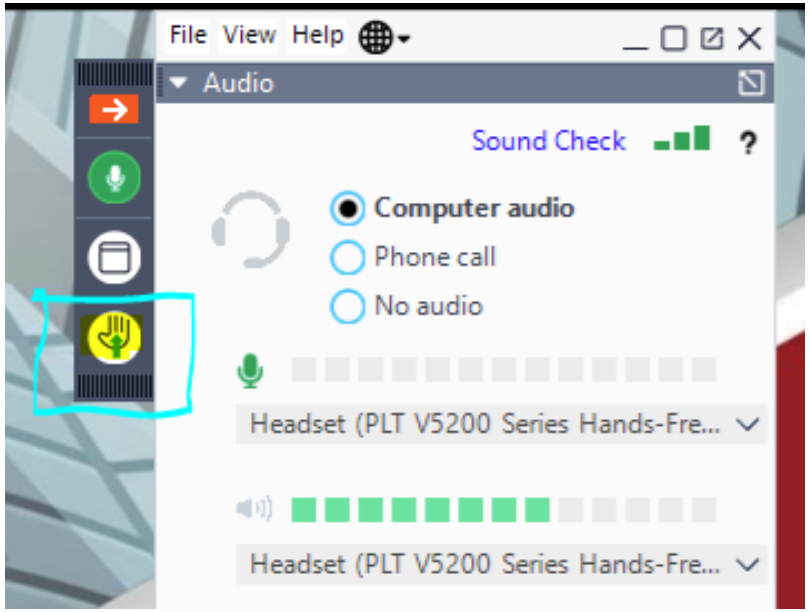

5. Approval of Minutes from the Previous Meeting

6. Air Movement Division Advocacy Issues

Mark Stevens

AMCA Executive Director

CAISEMS

(Coordination and Alignment of IEC & ISO Standards for Energy Efficient Electric Motor Driven Systems)

CAISEMS

- IEC Looking to extend their regulatory influence
- Desire an EEI metric
- Contentious meetings
- Pump and compressor ISO TCs have “walked”

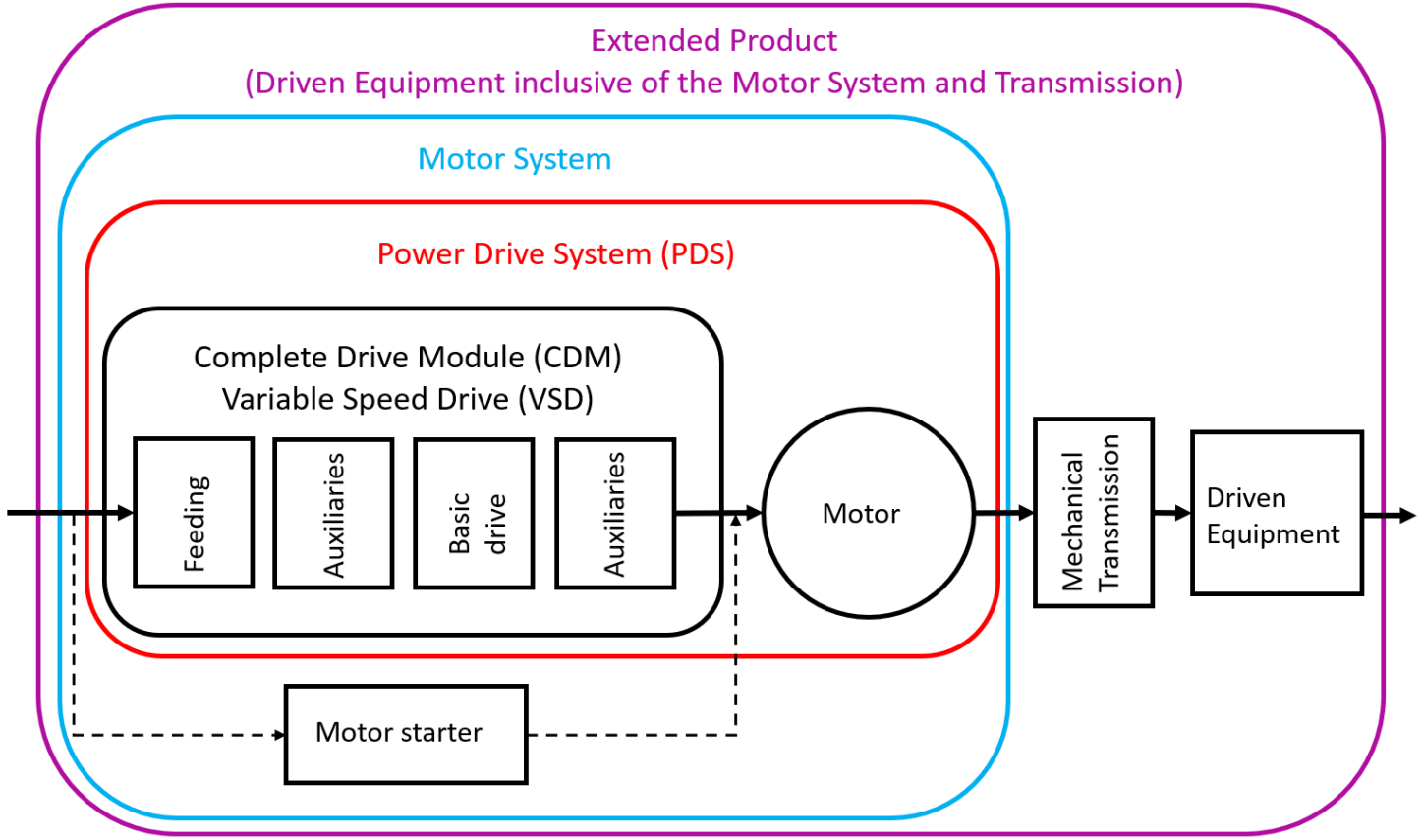

CAISEMS

- TC 117 Fans wants better motor system data
- Board asked Euro Region Steering Committee to take the lead
- Next meeting in November

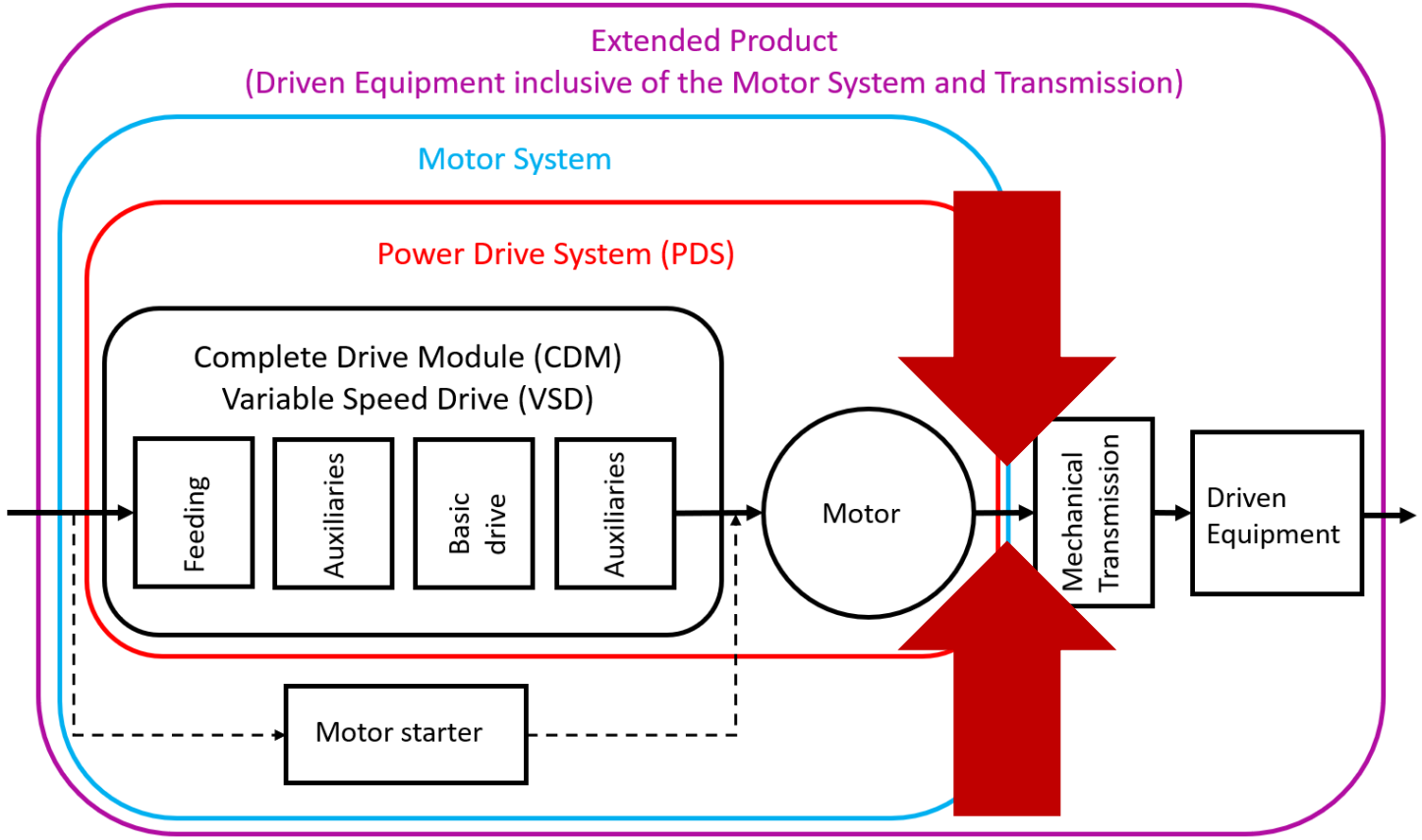

Tim Mathson

AMCA Principal Engineer

EVIA

EVIA Standard Proposal

EVIA is preparing a Proposal for a Standardization Request (sReq) related to “Fan System Efficiency” and is requesting endorsement from both European AMCA and Eurovent.

EVIA
European Ventilation Industry Association

EUROPEAN amca

EUROVENT
EUROPE’S INDUSTRY ASSOCIATION FOR **INDOOR CLIMATE, PROCESS COOLING,** AND **FOOD COLD CHAIN** TECHNOLOGIES

EVIA Standard Proposal

- Purpose – defend against EEI metric
- Documents
  - Problem Statement
  - Standards Proposal
- Issues
  - System Efficiency Metric
  - Measurement only
- Timeline
  - Meeting with Policy Officer in November or December

Aaron Gunzner

AMCA Advocacy Manager

Michael Ivanovich

AMCA Sr. Director, Global Affairs

FEI Advocacy

FEI Advocacy

- Model Energy Codes and Standards – *Michael Ivanovich*
- Federal and State Fan Regulations – *Michael Ivanovich*
- State Energy Code Initiative – *Aaron Gunzner*
- Rebate Programs – *Aaron Gunzner*
- FEI Certification – *Aaron Gunzner*

Model Energy Codes and Standards

- FEI replaces FEG in:
  - ASHRAE 90.1-2019: Energy Standard for Buildings…
  - ASHRAE 189.1-2020: Standard for High Performance Buildings…
  - International Energy Conservation Code (IECC) – 2021
  - International Green Construction Code (IgCC) -2021

  - Other changes made to baseline language increases scope, thus saving energy beyond the change in metrics

  - Interested? Join AMCARC / Fan Regulation Committee

Federal and State Regulations

- DOE on hold for commercial and industrial fans until after election
- California Title 20 (similar to DOE, but only at state level)
  - Awaiting publication of AMCA Standard 214
    - AMCA 214 is a TEST PROCEDURE ONLY – currently in balloting phase
    - Think: AMCA 207 + AMCA 208 + AMCA 211 >>>> Ref. AMCA 210
    - AMCA 214 year-end 2020
    - California “done” year-end 2021; effective late 2022/early 2023?
    - Superseded by DOE if/when DOE finishes.
  - Interested? Join AMCARC / Fan Regulation Committee

State Energy Code Initiative

- States *generally* adopting IECC-2018 or ASHRAE 90.2016
  - AMCA advocates replacing FEG section with FEI section
  - Florida did this when adopting IECC-2018
  - Oregon adopting ASHRAE 90.1-2019
  - California Title 24 does not use a model code – FEI proposed for 2022
  - AMCA updated FEI microsite and advocacy brief for state code push
  - www.amca.org/fei
  - Note: Third-party-certified ratings required for Cal. T24-2022 and IECC-2021

  - Interested? Join AMCARC / Fan Regulation Committee

Rebate Programs

- Pacific Northwest completed analyses
  - Feeds into Wash, Oreg., Idaho, and Calif. Incentive programs
  - Seattle City Light is first
  - Other utilities and regional energy offices taking interest

  - AMCA needs to assess its role and level of investment

  - Rebates target distributors; not manufacturers or end users
  - Hydraulic Institute helping AMCA figure things out

  - Interested? Join AMCA Rebate Committee….

AMCA Certified FEI Ratings

- Nearly 300 Product lines
- www.amca.org/find-FEI

- CRP needed for:
  - IECC-2021 FEI provision, where adopted
  - California Title 24-2022, if it finishes with FEI
  - Rebate programs based on Pacific Northwest analyses

  - Certified Ratings generally being advocated for in U.S. codes and standards wherever possible

  - Interested? Join AMCARC / Fan Regulation Committee

7. Standards, Publications & Laboratory Updates

David Johnson

AMCA Standard 220 Committee Chair

ANSI/AMCA Standard 220

Laboratory Methods of Testing Air Curtain Units (ACU) for Aerodynamic Performance Rating

BSR/AMCA Standard 220-20

- Status – Completed 220 Air Movement Division Ballot 09-21-2020
- Started as refresh, realized all cabinets treated as rectangles
- Created new methodology utilizing a discharge plane and Normal Vector to address non-rectangular cabinets

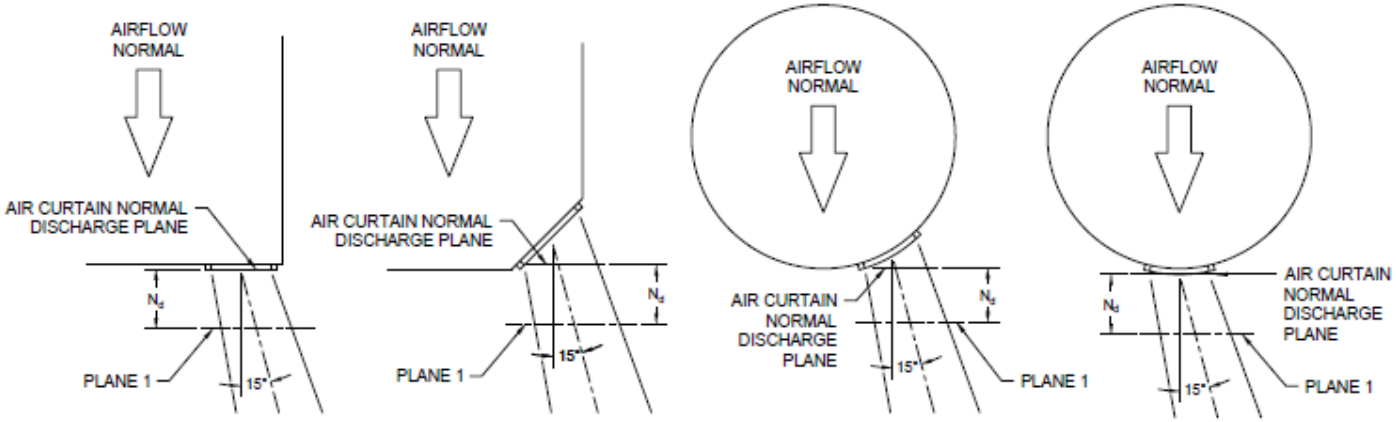

Note - the grills illustrated in the above examples are not indicative of all constructions and are only used to illustrate the measurement location of the leading and trailing edges of the discharge nozzle.

BSR/AMCA Standard 220-20

- Clarified how the nozzle discharge angles were to be determined during the test with text and additional figures
- Created new methodology to address setup of ACU's with more than one active discharge nozzle
- Clarified when the velocity projection test is terminated when a minimum average air curtain core velocity is specified

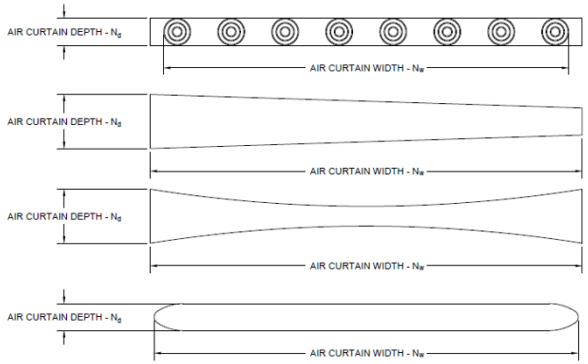

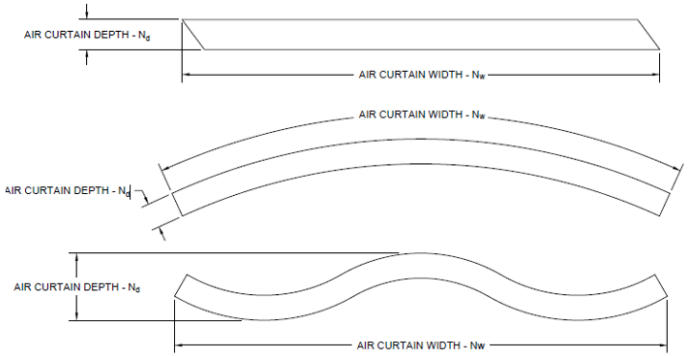

BSR/AMCA Standard 220-20

- Definitions updated with revisions to harmonize with AMCA 99
- Deleted ACU Efficiency calculation section which was actually ACU Fan Efficiency and not accurate representation
- Adopted input boundaries format from AMCA 210 for ACU Power Rating that takes into consideration motor control losses

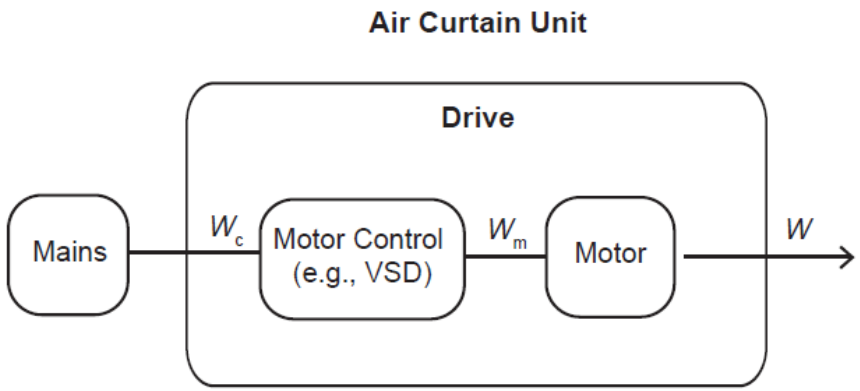

AMCA Air Curtain Activities

- To replace ACU efficiency the development of an Effectiveness methodology is underway using Dr. Wang's Phase 5 research
- Other activities:
  - Revision of ISO27327-1:2009 Fans - Air curtain units - Part 1: Laboratory methods of testing for aerodynamic performance rating
  - Development of ISO/CD TR 27327-3 Fans - Air curtain units - Part 3: Test methods to determine energy effectiveness
  - Participating in AMCA un-ducted fan COVID white paper
  - Developing ASHRAE ACU design guidebook
  - Currently exempt from Government regulation

Kyle Weinmeister

AMCA Standard 240 Committee Chair

Positive Pressure Ventilators

AMCA 240 - Positive Pressure Ventilators

- Updates to include battery operated PPVs
  - Take account for new technologies
  - Not limit future innovations
- Similarities with ISO 24660 and DIN 14963

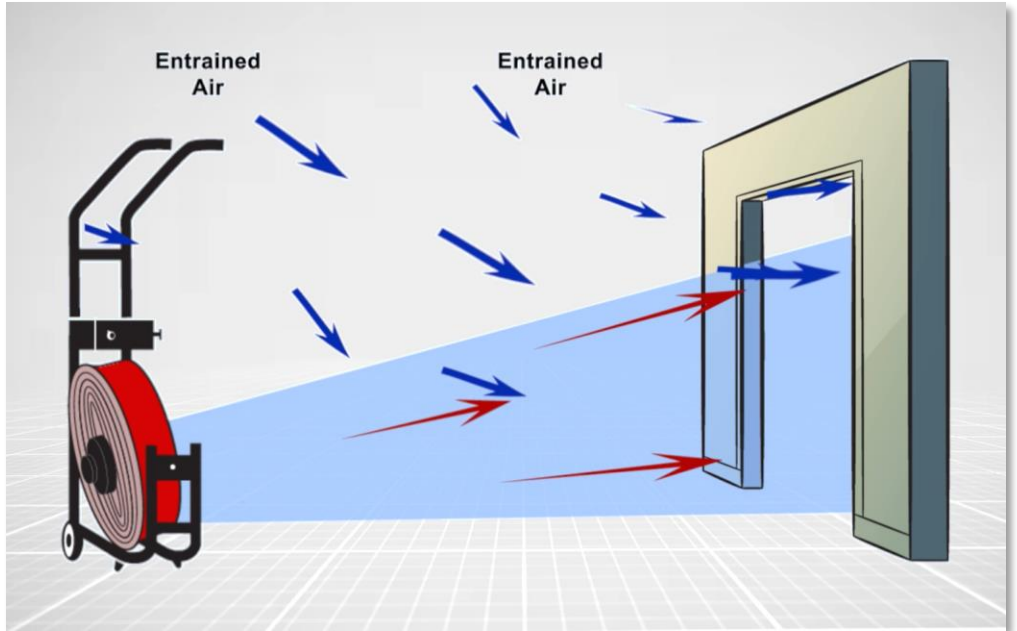

Michael Feuser

AMCA Standard 250 Committee Chair

Jet Fans

AMCA 250 - Laboratory Methods of Testing Jet Fans for Performance

Chair: Michael J. Feuser (Twin City Clarage, LLC)

Vice Chair: Greg Sanchez (New Jersey Transit)

- 17 Voting members, 24 Non-voting members
- Meetings Monthly 5/27/20 – 10/13/20 (ongoing)

Hot Topics:

- Sound
- Factory velocity testing
- Calibration

Harold Dubensky

AMCA Standard 270 Committee Chair

Fan Arrays

AMCA 270 - Laboratory Methods of Aerodynamic Testing Fan Arrays for Rating

Chair: Harold Dubensky (Johnson Controls, Inc.)

Vice Chair: John Bade (2050 Partners, Inc.)

- 19 Voting members, 12 Non-voting members
- Meetings Bi-Weekly 4/9/20 – 10/22/20 (ongoing)

- Finalized the Title, Purpose, and Scope
  - Limited to aerodynamic performance of arrays
  - Direct driven fans only
  - Vibration of array fans not in scope

Overlay AMCA 270 onto AMCA 210

- Review each section of AMCA 210
- Determine what needs to be added related for fan arrays
- Determine what exceptions to AMCA 210 are needed

Sections In Progress

- Clarify definitions
- Determine Instruments and Methods of Measurements
  - Airflow Measurement
  - Pressure Measurement
  - Power Measurement
  - Fan Speed Measurement
  - Fan Electrical Power Measurement
- Calculations for multiple fans
  - Duct Fitting or Transition losses
  - Power calculations
  - Power to shaft horsepower

AMCA 270 - Laboratory Methods of Aerodynamic Testing Fan Arrays for Rating

- Next Sections to be worked
  - Test Setups and Equipment
  - Observations and Conduct of Test
  - Report and Results of Test
  - Annexes
- Committee approval (30-45 days)
- Total draft approval time ~ 4-6 months

Joe Brooks

AMCA Director of Publications and Standards

AMCA 214 – Test Procedure for Calculating FEI

AMCA 214 - Test Procedure for Calculating FEI, Status

- Division letter ballot: 2 – ‘No’ votes, no changes made
- Public review, over 30 comments from AHRI, many changes made
- Major changes made this past year:
  - Added compressibility effects into calc’s.
  - Revised reporting and record-keeping requirements
  - Deleted reference to embedded fans
  - Added interpolation equations

AMCA 214 - Test Procedure for Calculating FEI

- Current State:
  - AM Engr. Stds. Committee Ballot Closes October 29, 2020

- Next steps:
  - AM division letter ballot
  - Public review (concurrent with div. ballot)
  - Board ratification
  - ANSI approval

Rad Ganesh

AMCA Publication 211 Committee Chair

AMCA 211 – Certified Ratings Program

AMCA 211- Certified Ratings Program for Fan Air Performance

- AMCA 211, along with its testing counterpart, AMCA Standard 210, has been a major backbone of AMCA since its inception over 100 years ago.
- It has gone through a major overhaul with the committee, addressing over 30 lingering comments and working diligently over the past 2 years through COVID challenges. It is now positioned well into the future.
- It will have a lasting impact on fan manufacturers, customers, consulting engineers and the fan industry overall.
- Committee Vote on Draft coming up in the next couple weeks
- As chair, I would like to acknowledge the tremendous contributions of AMCA staff.

AMCA 211- Key Revisions

- **Introduced new check test tolerances**
  - Consistent with other national and international standards
  - Improved credibility with customers, regulators in meeting design Point of Rating (POR) with tolerance only on Power
- **Alternate Test Determination Method (ATDM)**
  - Ease of certification of fan with static accessories like hoods, stack caps
  - Reduce testing burden by allowing calculations with proper validation
- **Speed and diameter interpolation to complement fan laws**
  - Smoother higher efficiency transitions for larger diameters and higher speeds
- **Calibrating Power Drive Systems (PDS) for air and FEI certification**
  - Allows integration of current fan Certified ratings with future Motor and Drive technologies, in addition to existing AMCA 207 calculations, for complete ‘Wire to Air’ certification
- **Certification for Large Diameter Ceiling Fans**
  - Extended to International markets
  - Consistent with US DoE compliance

Nazme Mohsina

AMCA Technical Director

Laboratory Update

AMCA Laboratory Update

- Virtual witness testing
- Large Diameter Ceiling Fan test
- Jet Fan Test
- ASHARE RP 1769
- Testing for other organizations
  - ENERGY STAR
  - AHRI
  - HVI

8. Other Business

Other Business

- Future Work – New Standards Starting Soon
  - AMCA 280 - Method of Test for Wind Resistance, Impact Resistance, or Both for Fans
  - AMCA 340 - Laboratory Methods of Testing to Determine the Sound Power Level of Large Diameter Ceiling Fans

AMCA 280 - Method of Test for Wind Resistance, Impact Resistance, or Both for Fans

- Purpose – see title

- Scope – Demonstrate a fan's capability to withstand wind pressure, lateral force, missile impact, or combination of each.

AMCA 340 - Laboratory Methods of Testing to Determine the Sound Power Level of Large Diameter Ceiling Fans

- Purpose- Develop a MOT for LDCF to determine L_w.

- To allow certification of sound data in a manner that is cost effective and produces accurate, repeatable and reproduceable results and provide standardize design data for the application of LDCF in occupied spaces.

9. Questions

10. Next Meeting

The next regular meeting of the Air Movement Division is to be announced.

11. Adjournment