Pressures in a Ventilation and Fan System

amca insite

AHR EXPO Atlanta FEB 6-8

Lisa Cherney

Education Manager, AMCA International

Session Moderator

- Joined AMCA in February 2019
- Responsible for development of AMCA's education programs; staff liaison for the Education & Training Committee
- Projects include webinars, online education modules, presentations at trade shows, AMCA Speakers Network and many other items.

Participation Guidelines

- Please place your cell phone on silent or vibrate.
- There will be Q&A at the end of the session.
- To receive PDH credit for attending:
  - Be sure to have your badge scanned by a room monitor so a complete attendee list can be generated.
  - You must be present for the entire session and complete a post-session online evaluation. Partial credit cannot be given for anyone who arrives late, leaves early or does not complete the evaluation.
  - There will be a QR code for the survey on screen at the end of the presentation, and a link will be emailed to everyone within 2 weeks. The survey must be completed to qualify for today's PDH credit. If you do not want PDH credit, completing the survey is optional, and your feedback is greatly appreciated.

AMCA International has met the standards and requirements of the Registered Continuing Education Program. Credit earned on completion of this program will be reported to RCEP at RCEP.net. A certificate of completion will be issued to each participant. As such, it does not include content that may be deemed or construed to be an approval or endorsement by the RCEP.

Attendance for the entire presentation AND a completed evaluation are required for PDH credit to be issued.

ENGINEERING
RCEP
REGISTERED CONTINUING EDUCATION PROGRAM

DISCLAIMER

The information contained in this education session is provided by AMCA International as an educational service and is not intended to serve as professional engineering and/or manufacturing advice. The views and/or opinions expressed in this educational activity are those of the speaker(s) and do not necessarily represent the views of AMCA International. In making this educational activity available AMCA International is not endorsing, sponsoring or recommending a particular company, product or application. Under no circumstances, including negligence, shall AMCA International be liable for any damages arising out of a party's reliance upon or use of the content contained in this education session.

COPYRIGHT MATERIALS

William Howarth

President
Ventilation & Fan Consulting Service International

- President- Ventilation & Fan Consulting Service International; Independent Consultant since 2017; frequent consultant to AMCA
- 30 years in Fan Engineering & Sales at Illinois Blower and Hartzell Fan
- Instructor at North Carolina Industrial Ventilation Conference
- Member US delegation for ISO Technical Committee 117 Fans
- ASHRAE Member
- **CONTACT**: WHowarth@vfcsintl.com
  Mobile +1 (847) 454-5420

Ron Wroblewski, PE

President, Productive Energy Solutions

Industrial Fan Systems Optimization, Consulting, and Training since 1998

- Developed online FEI training for AMCA; 39 years experience designing, troubleshooting, and optimizing fan systems
- Lead Trainer US DOE Industrial Fan Systems Optimization since 2004; Lead Trainer UNIDO Industrial Fan Systems Optimization since 2008
- Assessed fans at hundreds of industrial and commercial facilities
- Identified fan efficiency projects savings of over $11 Million/yr.
- **CONTACT**: Productive Energy Solutions, LLC; Madison, Wisconsin
  Landline (608) 232-1861; Mobile (for SMS) 1-608-770-4195

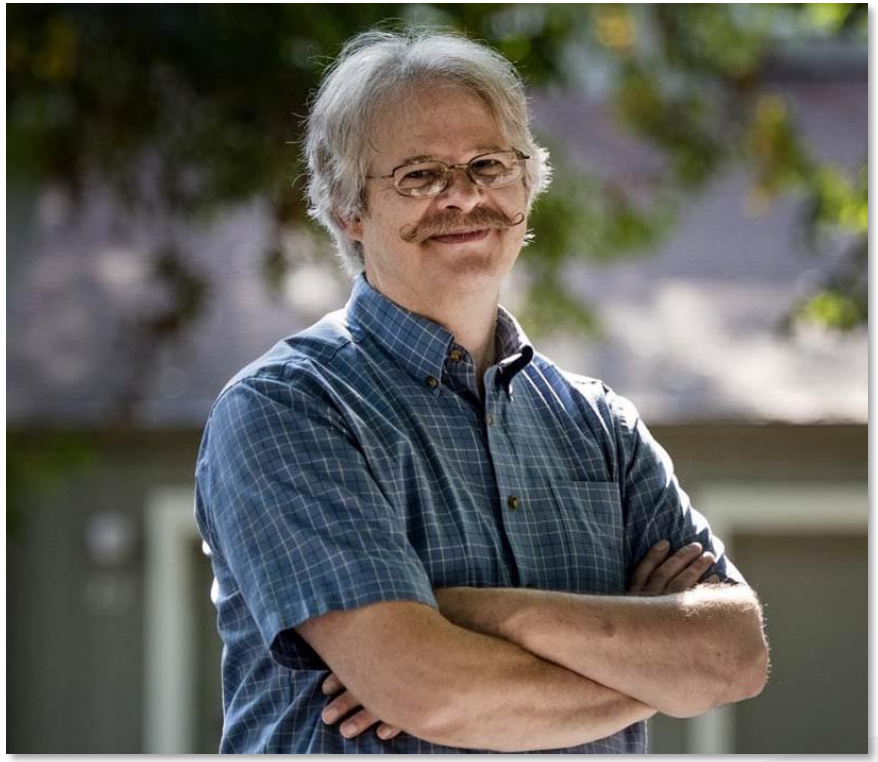

Pressures in a Ventilation and Fan System

Purpose and Learning Objectives

The purpose of this session is to introduce the pressures and how pressure losses are calculated. Also to be explored is how fan developed pressure interacts with the system pressure requirement.

At the end of this course, you will be able to:

- List two safety hazards of fans.
- Explain fan's role in an air system.
- Identify pressure types in an air system.
- Identify sources of pressure losses in a system.
- Calculate airflow velocities.
- Calculate velocity pressures.

Fan Safety

- Fans contain moving parts and can be dangerous.
  - Install guards.
  - Know the “Hidden Dangers”
    - Suction and Pressure
    - Windmilling
    - Temperature
    - Noise and Environment
    - Stroboscopic Effect
    - Special Purpose Fans and Systems
  - Have a “lock out” procedure.
- AMCA Publication 410-96, "Recommended Safety Practices For Users and Installers of Industrial and Commercial Fans" is an excellent resource.

AMCA Publication 410

RECOMMENDED SAFETY PRACTICES

for Users and Installers of Industrial and Commercial Fans

AIR MOVEMENT AND CONTROL ASSOCIATION INTERNATIONAL, INC.

30 West University Drive
Arlington Heights, IL 60004-1893 U.S.A.
Tel: (847) 394-0150 • http://www.amca.org
Fax: (847) 253-0088 • info@amca.org

Power Roof Ventilator | Wall Exhauster | Propeller Fan | Axial Fan

Centrifugal Fan | Upblast Roof Exhauster

FOREWORD

i. This publication has been prepared by the Air Movement Division of the Air Movement and Control Association International, Inc. (AMCA International). The information contained in this publication has been derived from many sources. The suggestions made necessarily should be general in their meaning and cannot be applied literally to all specific situations or conditions.

ii. **The safe installation and operation of fans is the responsibility of the system designer, installer, maintainer, and user.**

From the initial system design through the life of the equipment, safety should be a foremost consideration. Some areas which require some special attention include system design, layout and construction, fan performance specification, foundation and installation details, storage procedures, start-up and commissioning procedures, operation, maintenance, and repair. Specific safety requirements are mandated by federal, state, and local codes. *Recommended Safety Practices for Users and Installers of Industrial and Commercial Fans* is published by AMCA International for assistance. System designers, installers, maintainers, and users should consult and properly comply with all applicable codes and guidelines.

iii. The safety recommendations contained herein are intended to assist designers, installers, maintainers, or other users of air moving devices in the safe operation and use of the devices mentioned. These recommendations do not represent the only methods, procedures, or devices appropriate for the situations discussed. Caution should be used at all times when working in or around moving parts.

iv. AMCA International disclaims any and all warranties, expressed or implied, regarding the products sold by the manufacturer with which this booklet has been provided. Further, AMCA International recommends that competent personnel be consulted in deciding what is the preferred or recommended safety procedure in a particular instance where the guidelines contained in this booklet are unclear or in any way incomplete.

v. AMCA International has offered the information within this booklet to assist in the safe operation, maintenance, and use of the products sold by members of AMCA International. In so doing, AMCA International does not assume any legal duties of the designer or manufacturer to instruct or warn about their product. AMCA International expressly disclaims liability for any injury or damage arising out of the operation or use of the product or the guidelines contained herein.

vi. These recommended safety practices were adopted by the AMCA International membership on April 28, 1996.

1. Introduction

1.1 Fans and other air moving devices are made in a wide variety of types, sizes, and arrangements. This guide addresses the proper use and installation of industrial and commercial fans. It is not intended to address residential and consumer fans.

1.2 Various "size" factors are important when assessing potential for injury; some factors include: diameter of impeller (wheel, rotor, propeller), rotational inertia, voltage, and current.

1.3 This guide is intended to assist in the safe installation of air moving equipment and to warn operating and maintenance personnel of the commonly recognized hazards associated with this equipment.

1.4 **Handling and installation should always be performed only by experienced and trained personnel who are aware of the hazards associated with rotating equipment. Failure to comply with these practices may result in death or serious bodily injury.** In addition to following the manufacturer's installation instructions, care should be taken to ensure compliance with specific safety requirements mandated by federal, state, and local codes. Industry safety standards and practices published by AMCA International and by other recognized agencies and associations should be consulted and followed where applicable.

2. Personnel Safety Accessories

2.1 General

Protective devices are incorporated as standard construction on some types of fans but on many fans, these devices are offered as optional accessories. This is done because the need for the devices and the design required will frequently depend upon the type of system, fan location, and operating procedures being employed. Proper protective safety devices; company safety standards; specific safety requirements mandated by federal, state, and local codes; and industry safety standards and practices published by AMCA International and by other recognized agencies and associations should be determined by the user, who should specify and obtain the appropriate devices from the fan manufacturer or others, and should not allow operation of the equipment without them. Examples of available devices include the following:

2.2 Fan Guards

2.2.1 All fans have moving parts which require guarding in the same way as other moving machinery. Fans located less than seven (7) feet above the floor require special consideration. Specific safety requirements should comply with mandated federal, state, and local codes; and industry safety standards and practices published by AMCA International and

© 2009, Air Movement and Control Association, International

Question: What moves Air?

- Differential pressure moves air.

Fan's Role in Air System

- The purpose of a fan is to supply an air system with energy (in the form of a pressure differential) necessary to maintain airflow through the resistance of the system.

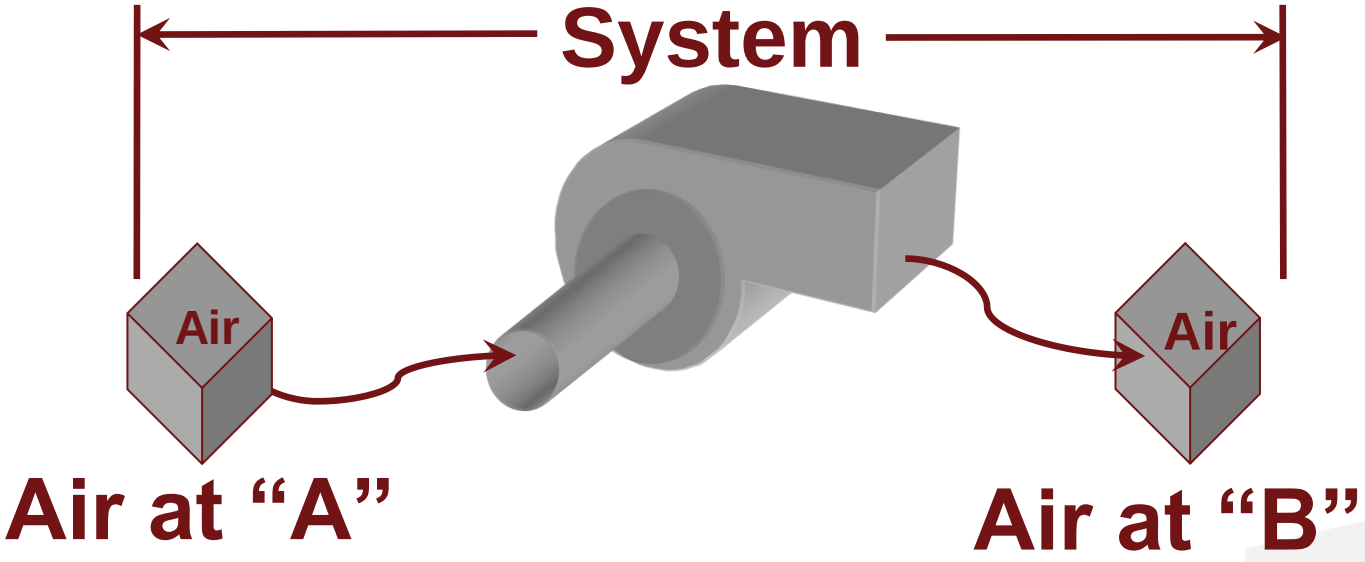

Different Fan Systems

- HVAC - heating, ventilating and air conditioning
  - Indoor environmental air comfort
- General Ventilation
  - High Flow Low Pressure Systems
  - Dilution Air Systems
- LEV System (Local Exhaust Ventilation)
  - Combination of hoods, ducts, cleaning devices, fan, and stack to control contaminant or exposure.
- Replacement Air System
  - Every CFM exhausted will be replaced.
- Process system
  - Dryer, Oven System, Boiler, Cooling System

Pressures in a System

- Static Pressure, P_s (SP)
  - The portion of air pressure that exists by virtue of the state of the air.
  - measured perpendicular to flow
  - Static Pressure may be positive or negative
- Total Pressure, P_t (TP)
  - The air pressure state and motion of the air.
  - Algebraic sum of P_s and P_v $\rightarrow$ $P_t = P_v + P_s$
  - measured parallel to flow
  - If air is at rest the total pressure will equal the static pressure
- Velocity Pressure, P_v (VP)
  - "Dynamic pressure" resulting from the motion of the air
- The pressures are changing throughout the system.

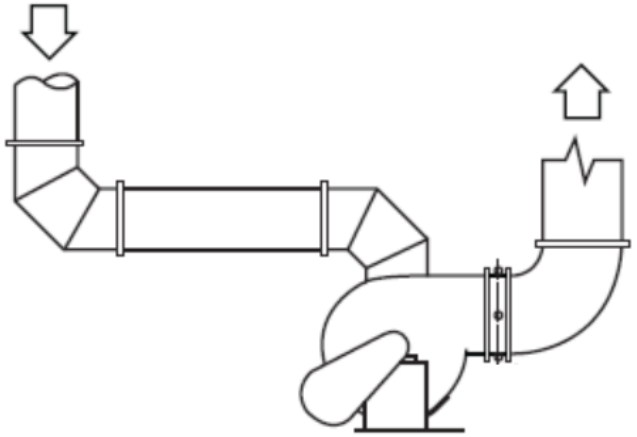

$$\mathbf{P_t = P_s + P_v}$$

Static Pressure, P_s

- "Potential pressure" in all directions
- Measured perpendicular to direction of flow
- Overcomes resistance in flow due to:
  - Dynamic losses:
    - Hood and duct entries
    - Fittings (e.g., dampers, elbows, etc.)
    - Air cleaners
  - Duct friction

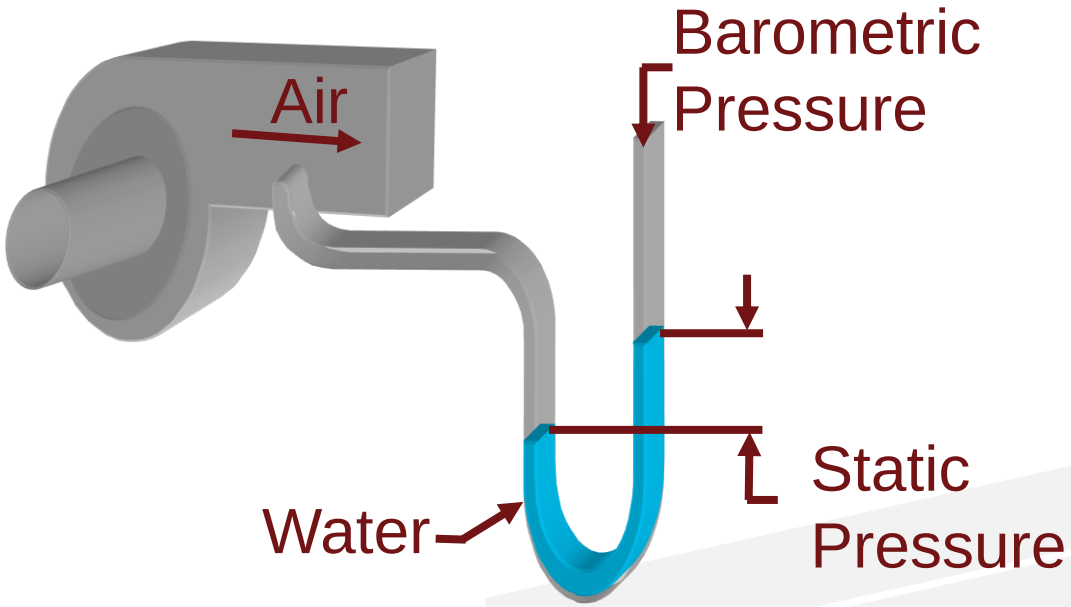

Total Pressure P_t

- Measured parallel and in the direction of flow
- Sum of static pressure P_s and velocity pressure P_v

$$P_t = P_s + P_v$$

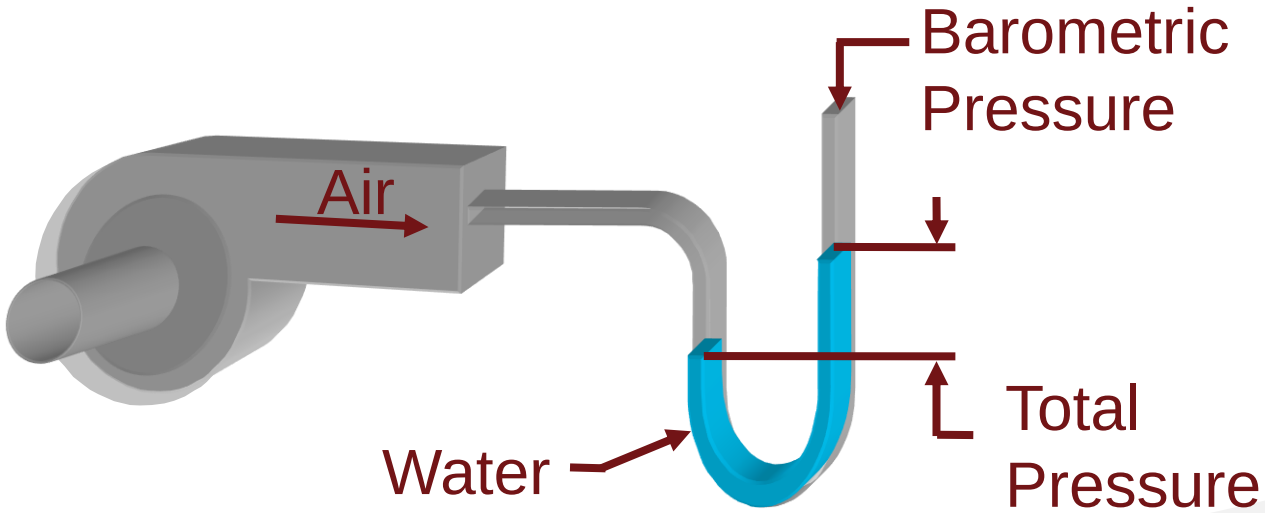

Velocity Pressure, P_v

- Measured indirectly (the difference between P_t and P_s) in existing system
- "Dynamic pressure"
- $P_v = (V / 1097)^2 \cdot \rho$ (I-P)
- $P_v = 0.5\ V^2 \cdot \rho$ (S-I)
- Where:

  P_v = velocity pressure, inch wg (Pa S-I)

  V = velocity, fpm (m/s S-I)

  ρ = density, lbm/ft³ (kg/m³ S-I)

  1097 = I-P Units Constant

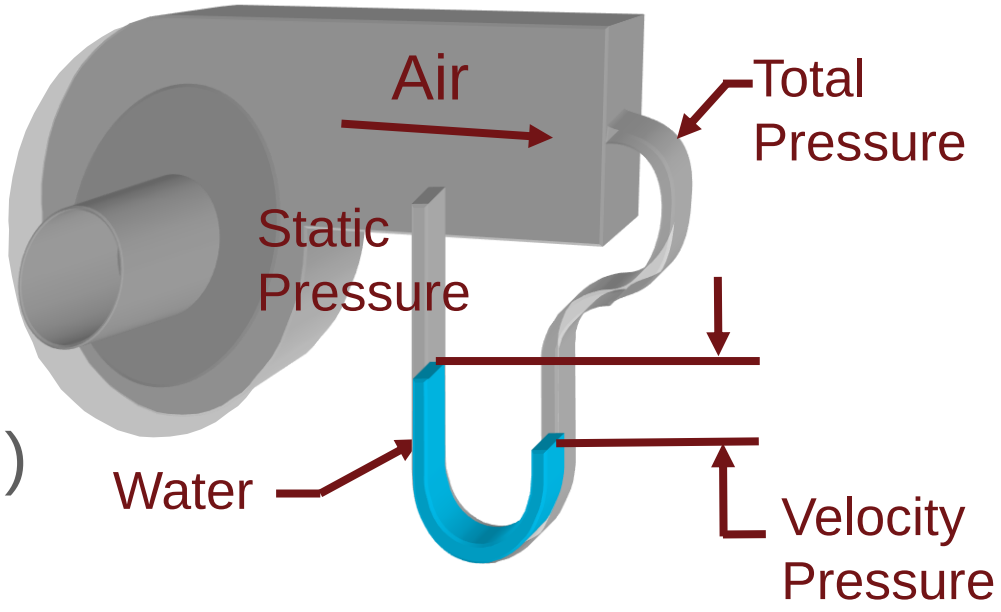

Flow Rate (Q) Equation

Calculate velocity of the air (in duct).

Q=Flow (volume/time)

- f^3/m (I-P)
- m^3/s (S-I)

V=Velocity

- f/m (I-P)
- m/s (S-I)

A=Area

- f^2 (I-P)
- m^2 (S-I)

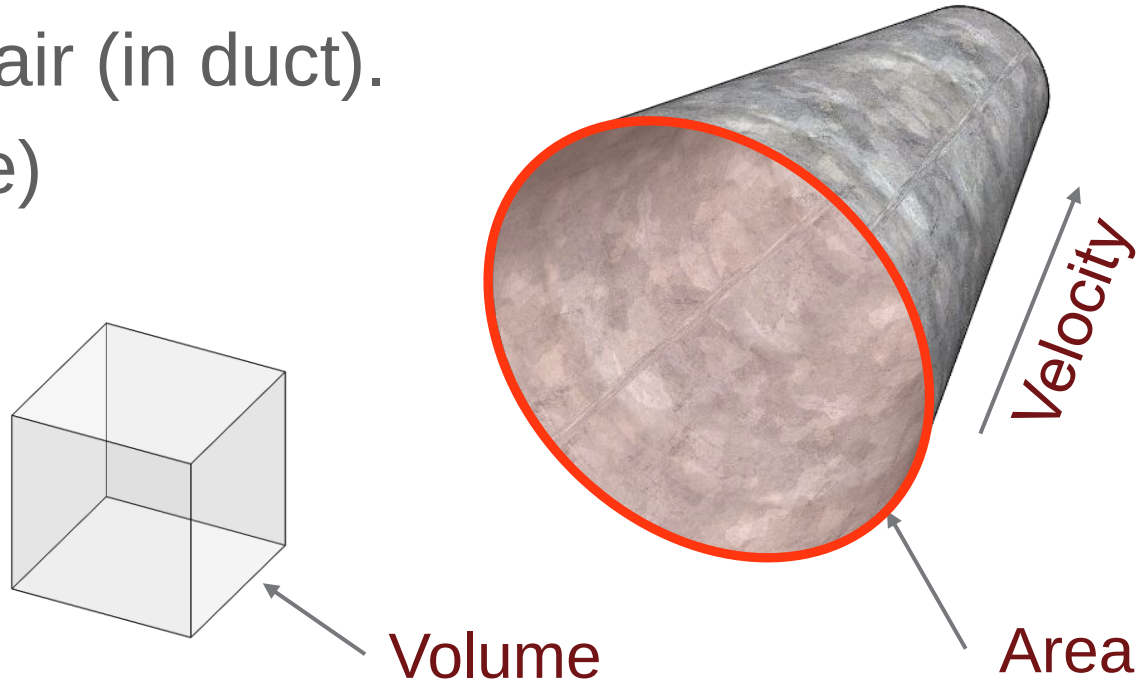

$$Q = V \cdot A \qquad V = \frac{Q}{A} \qquad A = \frac{Q}{V}$$

Measuring Pressures with Pitot-Static Tube

- Pitot tube is used to measure pressure
  - Used with a manometer (pressure meter) connected by flexible tubing.
  - Measured in the duct
  - Typical measurements:
    - Pascals (Pa)
    - Inches water (in. H_2O)
    - Millimeters water (mm H_2O)
  - Total Pressure
    - In the direction of airflow
  - Static Pressure
  - Velocity Pressure

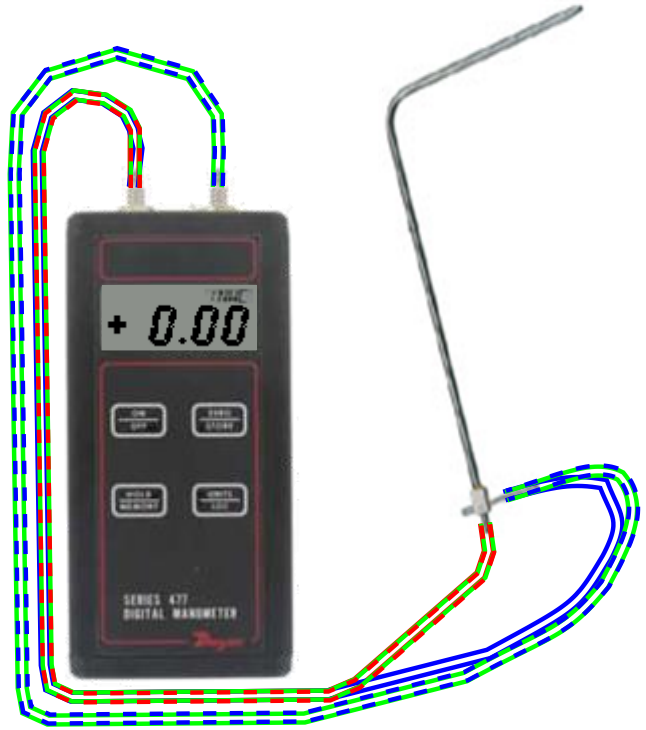

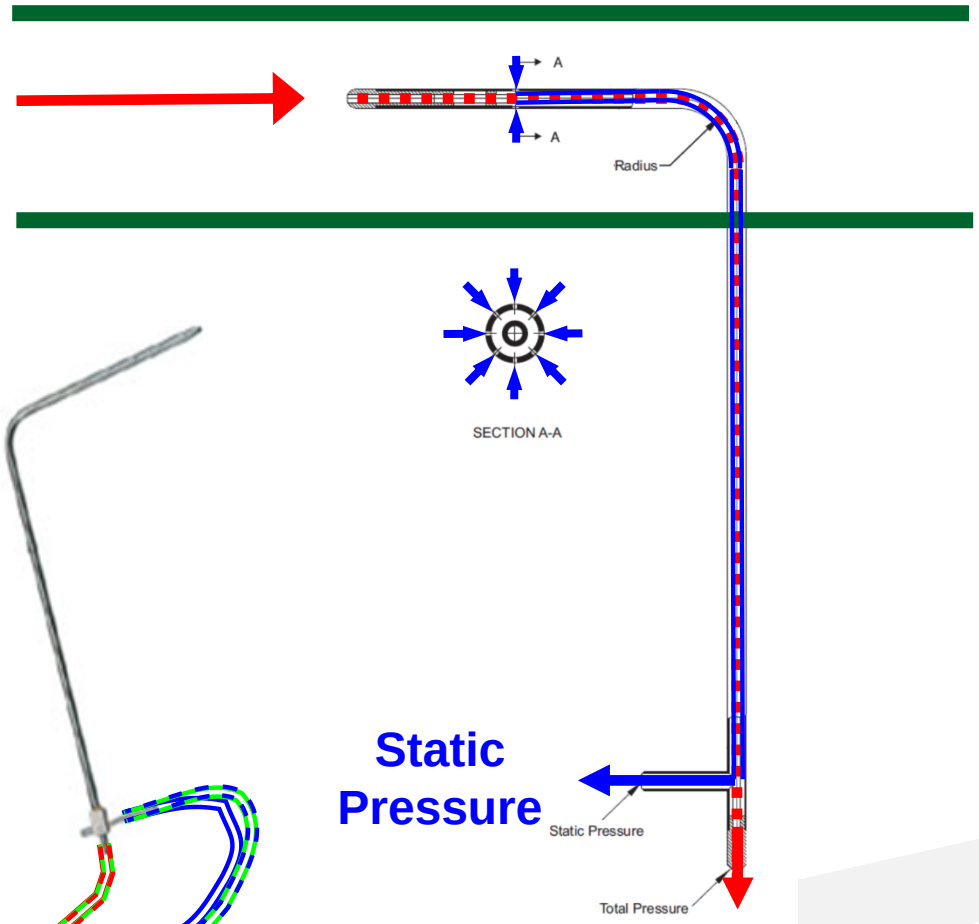

Pressure in a Non-moving Airstream

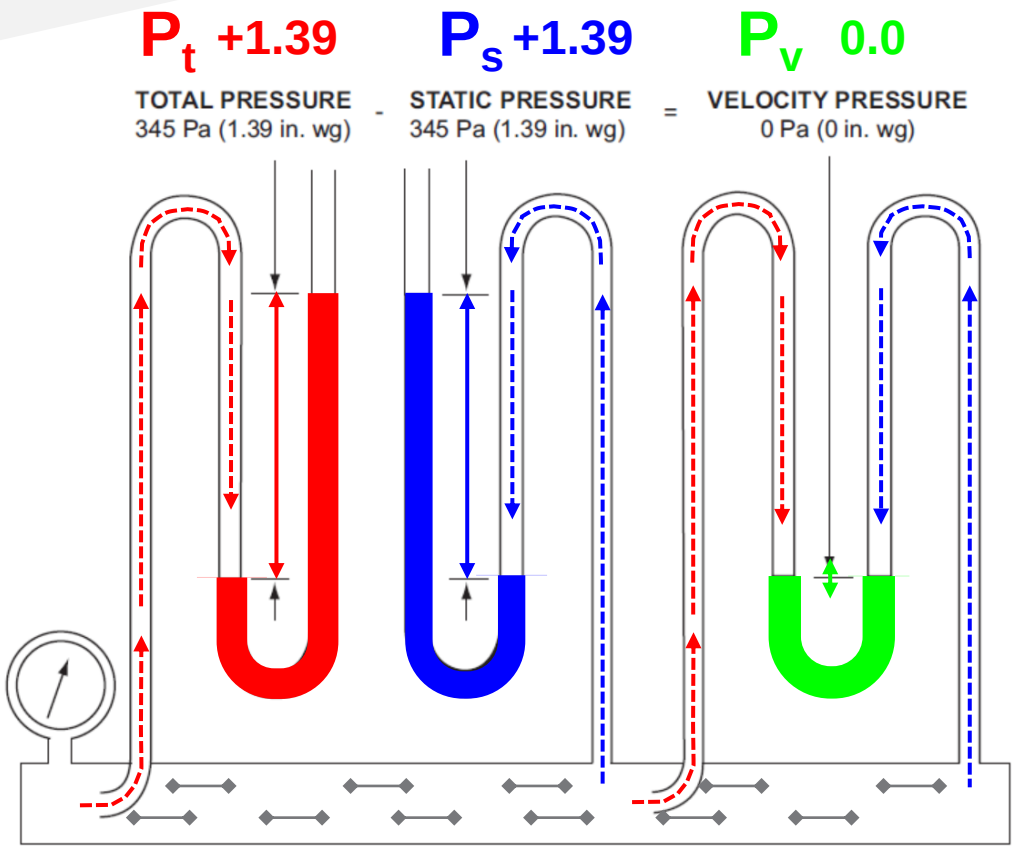

$$P_s + P_v = P_t$$

$$1.39 + 0.0 = 1.39$$

Reference AMCA 200 Air Systems
Figure 5A - Sealed System

The pressure in the seal length of duct is 345 Pa (1.39 in.wg) above atmospheric pressure. Since there is no airflow the velocity pressure is equal to zero. Total pressure equals static pressure.

Positive Pressure System

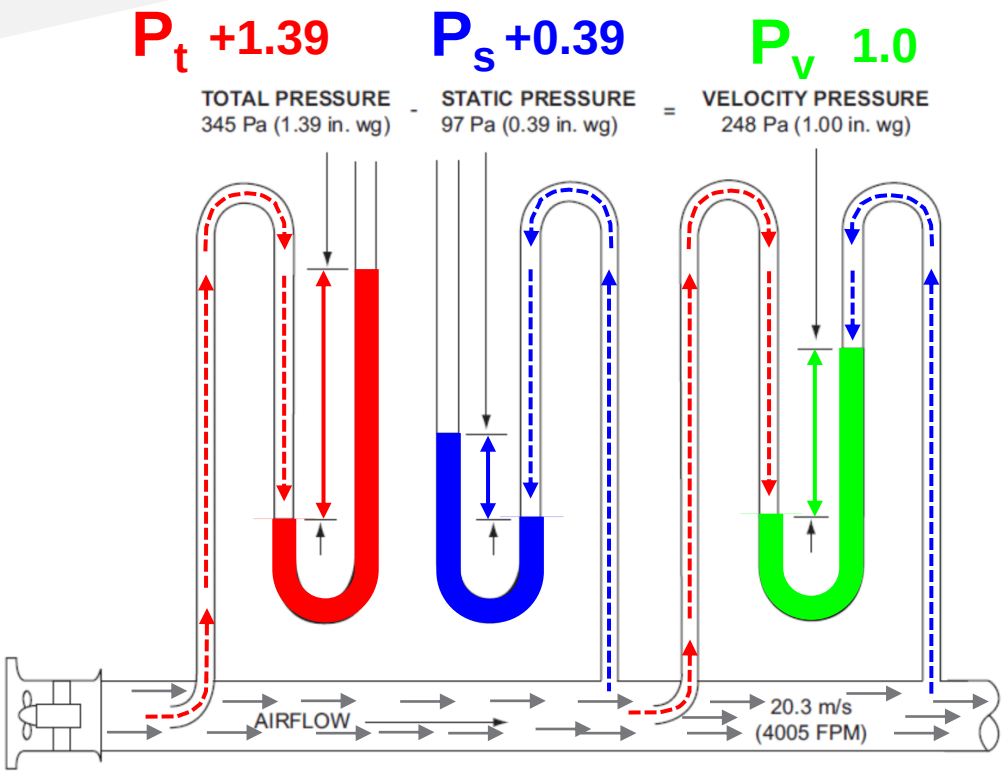

$$P_s + P_v = P_t$$

$$0.39 + 1.0 = 1.39$$

Reference AMCA 200 Air Systems
Figure 5B - Positive Pressure System

The duct open and a fan placed at one end blowing air through the duct, we find both static pressure and velocity pressure as illustrated by the water gauge. The total pressure is the sum of velocity pressure and static pressure.

Negative Pressure System

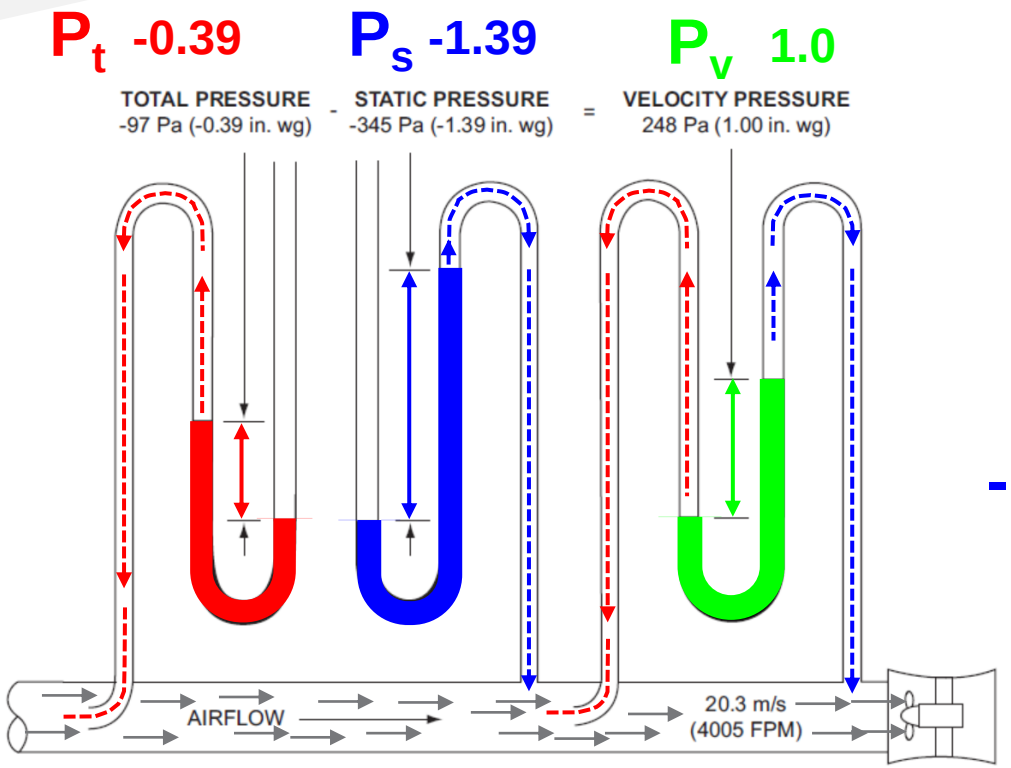

$$P_s + P_v = P_t$$

$$-1.39 + 1.0 = -0.39$$

Reference AMCA 200 Air Systems
Figure 5C - Negative Pressure System

The fan is placed at the end of the duct and draws air through the duct. In this case, the static pressure is below atmospheric pressure.

Pressures for Airflow in a Duct

Suction Side | Pressure Side

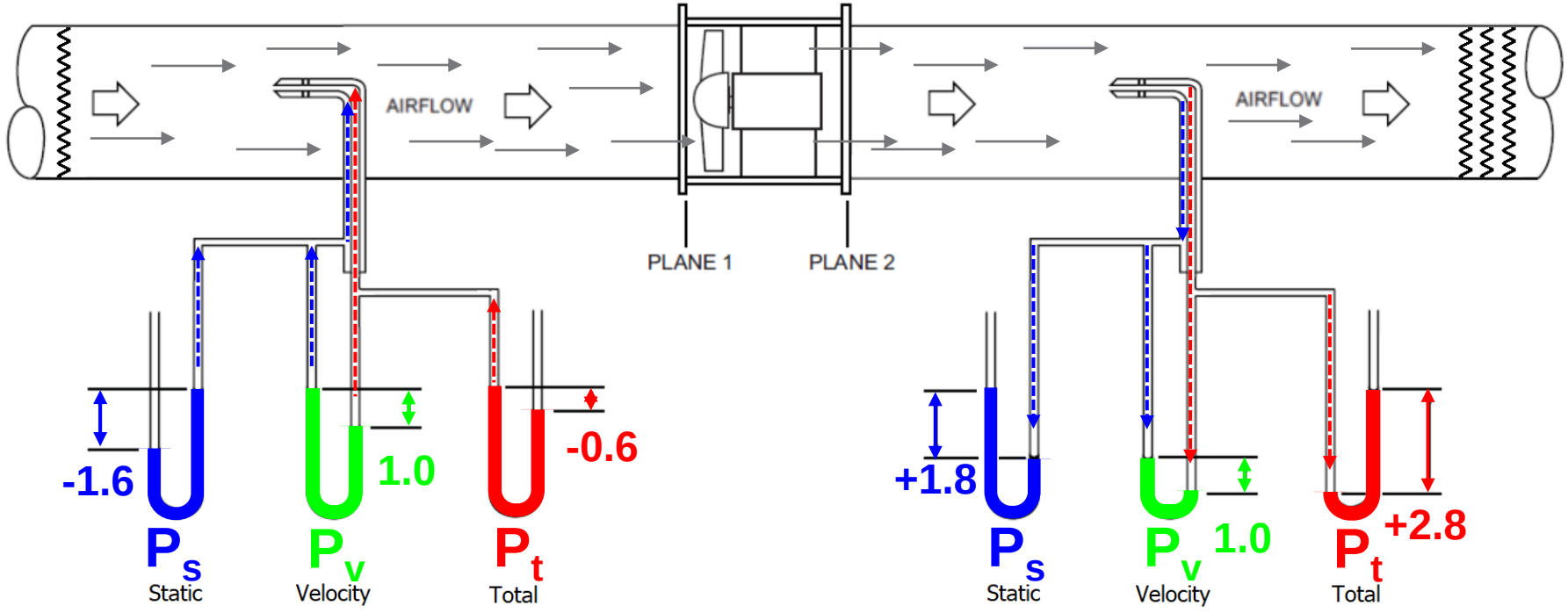

$P_s + P_v = P_t$

-1.6 + 1.0 = -0.6 in. wg

Pressure Below Atmosphere

$P_s + P_v = P_t$

1.8 + 1.0 = +2.8 in. wg

Pressure Above Atmosphere

Reference Figure C.5 - Fan Static Pressure for Installation Type D: Ducted Inlet, Ducted Outlet

Velocity Pressure and Velocity Calculation

Velocity Pressure Calculation

$$P_v = \left[\frac{V}{1097}\right]^2 \cdot \rho \qquad \left(in\,wg, f/m, \frac{lbm}{f^3}\right)$$

$$P_v = \frac{V^2 \cdot \rho}{2} \qquad (Pa, m/s, kg/m^3)$$

Velocity Calculation

$$V = \sqrt{\frac{P_v}{\rho}} \cdot 1097\ (f/m, in\,wg, lbm/f^3)$$

$$V = \sqrt{\frac{2 \cdot P_v}{\rho}} \qquad (m/s, Pa, kg/m^3)$$

$$P_v = Velocity\ Pressure\ (in.wg\ or\ Pa)$$

$$V = Velocity\ (f/m\ \ or\ m/s)$$

$$\rho = Gas\ Density\ (lbm/f^3\ or\ kg/m^3)$$

$$Q = V \cdot A \qquad V = \frac{Q}{A} \qquad A = \frac{Q}{V}$$

Overview of System Losses

- **Acceleration losses**
- **Friction losses**
- **Dynamic losses**
- **Component losses**
  - Air Cleaning Devices
  - Dampers
  - Other
- **System Effects**
- **Losses will be proportional to velocity pressure**

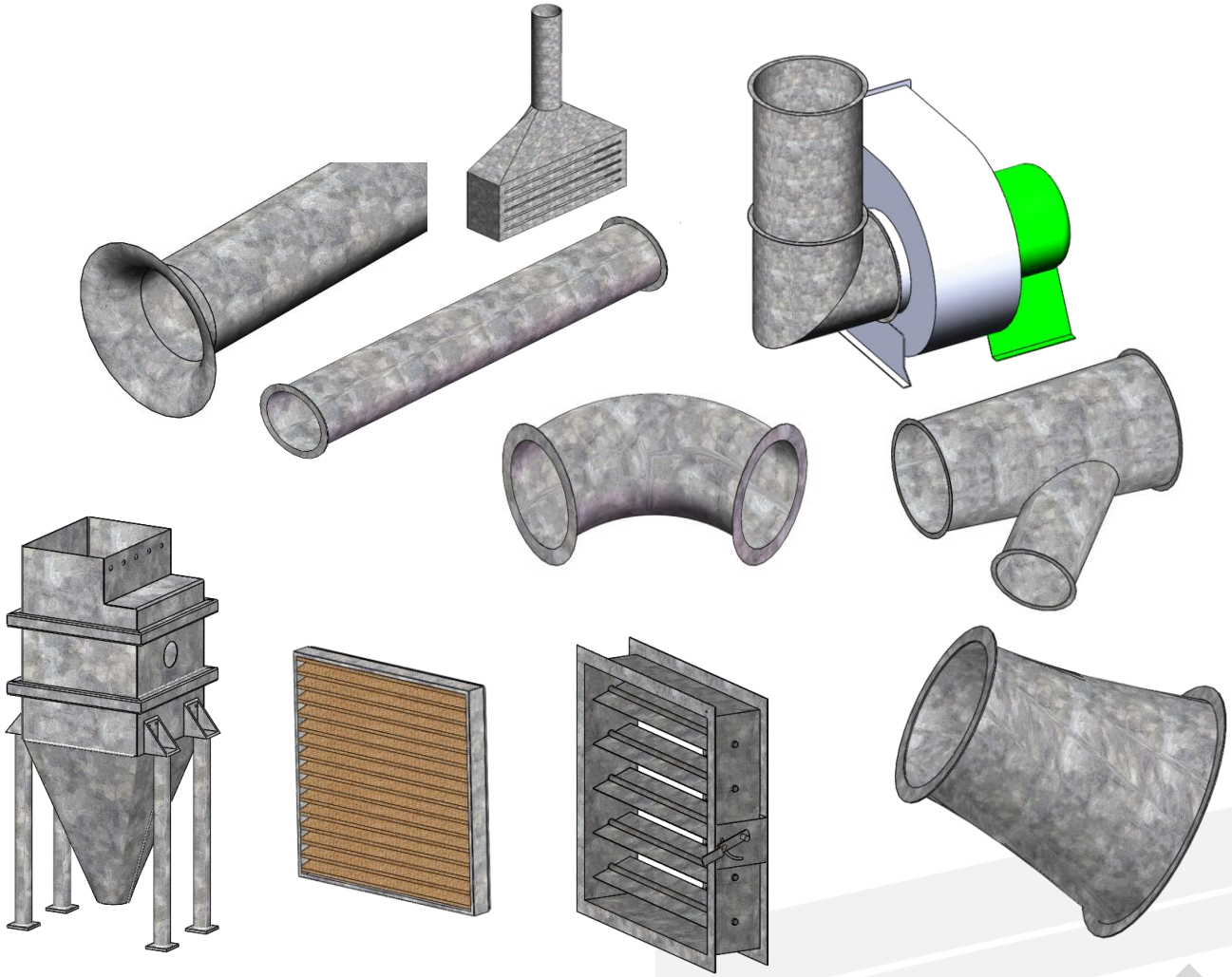

Losses are a Fraction(s) of Velocity Pressure

- The losses will be fraction(s) of the velocity pressure.
- The fraction(s) will be dependent on how much turbulence through the element.
- All elements have a friction loss.
- Increase in velocity will have pressure loss.
- Decrease in velocity will sometimes have a pressure gain.
- The flow must be accelerated into the duct system.
  - This is an additional loss to the loss for the inefficiency of the element.

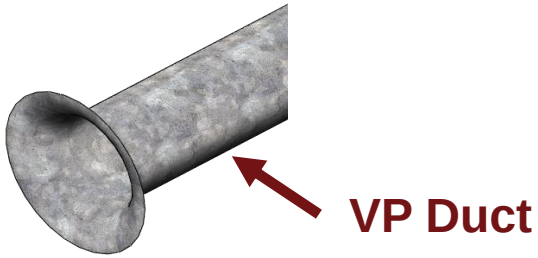

Simple hood
(Bell Mouth Entry)

Hood Entry Loss Coefficient			
Plain Duct End	Flanged Duct End	45° Cone Entry	Bell Mouth Entry
 F_h=0.93	 F_h=0.56 Conical	 45° 2X area F_h=0.15	 F_h=0.04
Sharp-Edged Orifice			
 F_h=1.78	 F_h=0.64 Rectangular	 45° 2X area F_h=0.25	 See Compound Hood

Hood Entry Loss = F_·VP

Compound Hood Entry Loss = F_s·VP + F_d·VP

$$Duct\ Acceleration\ Loss = 1 \cdot P_{v(duct)}$$

$$Element\ Loss = F_{element} \cdot P_{v\,element}$$

ASHRAE Duct Fitting Database App

- Application is available to calculate pressure losses for HVAC fittings.

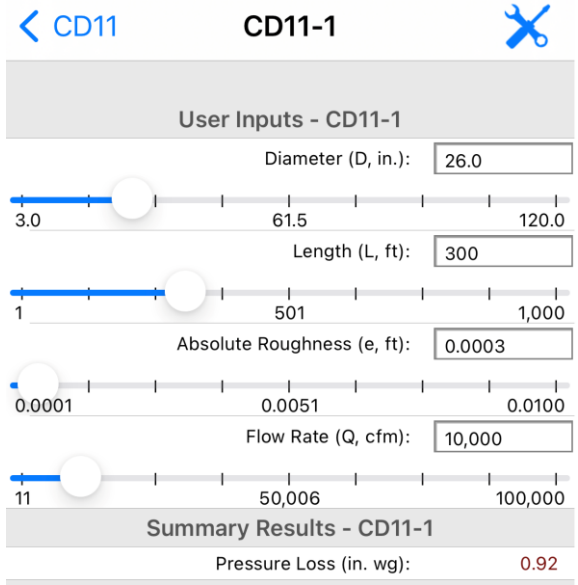

ASHRAE DUCT FITTING DATABASE			
Monday, July 11, 2022			
Tel: +1 (847) 454-5420 Fax: —-			
(CD11-1) Straight Duct			
(Colebrook 1939)			
INPUTS		OUTPUTS	
Diameter (D, in.)	26.0	Velocity (V, fpm)	2,712
Length (L, ft)	300	Vel Pres at Vo (Pv, in. wg)	0.46
Absolute Roughness (e, ft)	0.0003	Friction Factor (f)	0.0146
Flow Rate (Q, cfm)	10,000	Pressure Loss (in. wg)	0.92

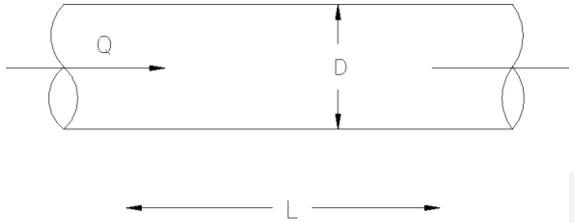

Pressure Losses the System

Where are the static pressure “losses” in this ventilation system?

- Hood entry losses due to:
  - Dynamic losses (turbulence)
  - Acceleration of the air and fumes into system
- Duct Friction
  - Duct losses (due to friction; measured centerline-to-centerline).
- Elbows
  - Dynamic losses (due to turning of the air stream)
- Branch Entries
  - Dynamic loss due to joining two airstreams together
- Pollution Control Equipment
- Fan
  - Adds energy to the system in the form of pressure
  - System Static Pressure (SSP)
- Discharge Duct (Stack)
- Dampers and other control devices (not shown)
- Duct expansions and contractions (not shown)

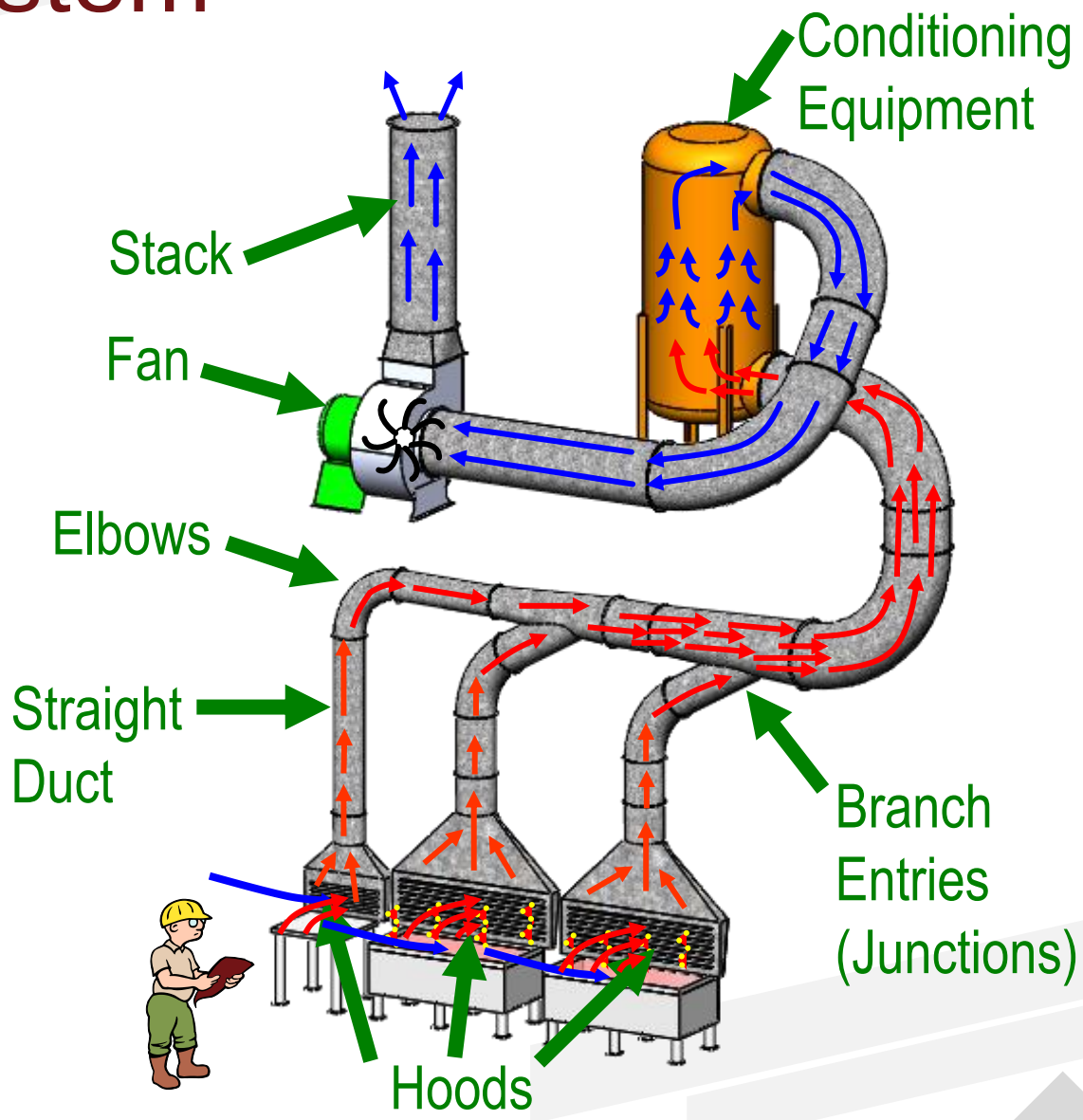

Pressures Through System

- The fan starts building pressure at the fan.
- Static pressure starts to increase
- The most negative point in the fan system will be the inlet of the fan.
- Velocity starts increasing
- Total pressure = static + velocity pressure.

$$P_t = P_s + P_v$$

P_v —
P_t —
P_s —

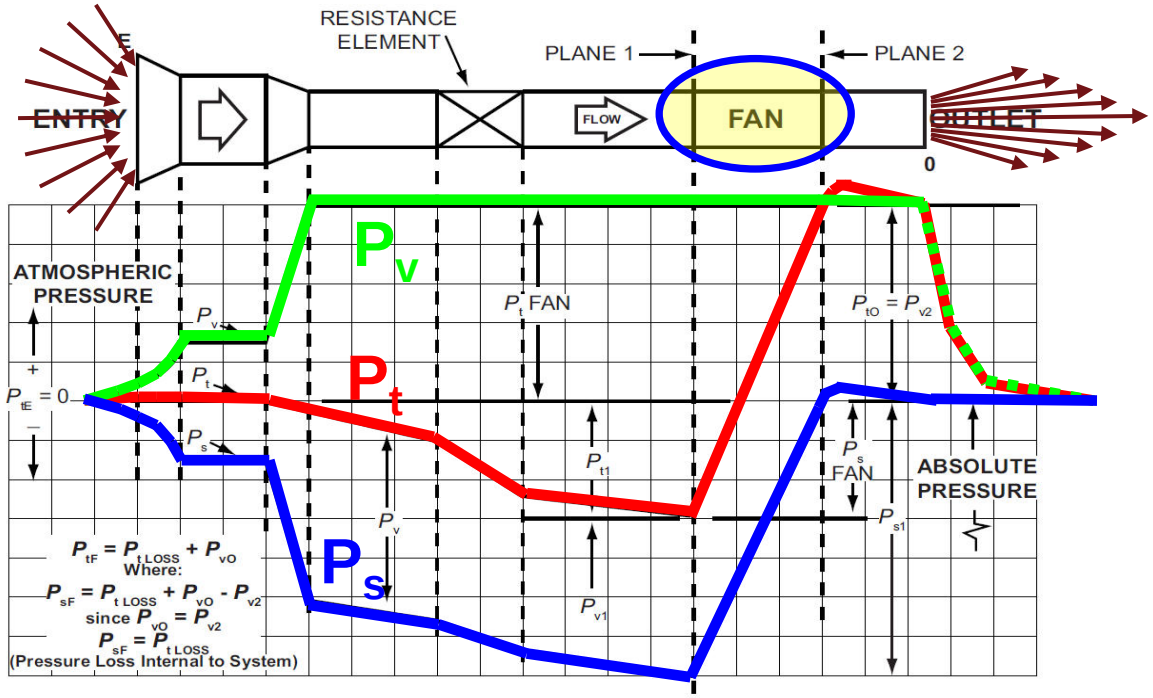

- Note the density and temperature at the fan inlet.
- The pressure on the fan outlet will be highest and be dissipated through the outlet side elements to the outlet of the fan system and discharge.

$$Fan_{SP} = SP_{out} - SP_{in} - VP_{in} \text{ @ \_\_\_CFM at \_\_\_Density and \_\_\_Temp.}$$

Fan & System Point of Operation

- Fan System Calculation
  - The flow and pressures for the entire system are calculated.
  - The pressure required to produce the flow will be cumulative up to the inlet of the fan plus the pressure requirement on the discharge side of the fan.
  - The flow from each inlet will combine in the duct system into the inlet of the fan.
- A fan provides the pressure to move the air through the system and the flow rate will reach a point of equilibrium (point of operation) when the pressure provided by the fan equals the pressure losses in the system at that flow rate.

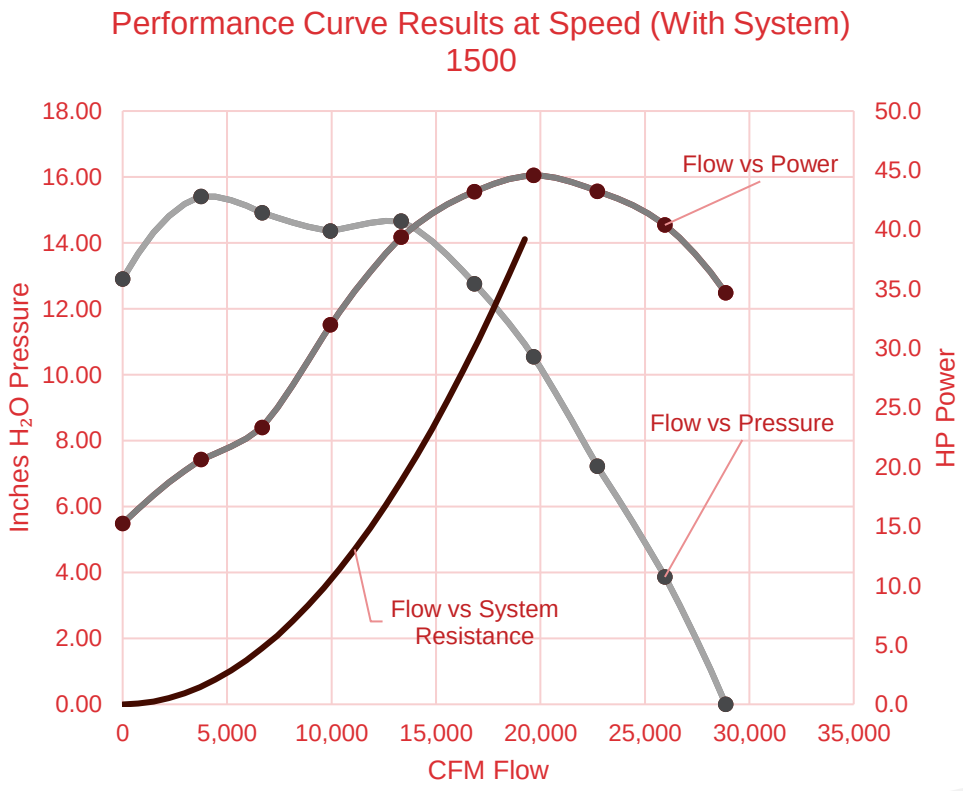

$$Fan_{SP} = SP_{out} - SP_{in} - VP_{in} \text{ @ \_\_\_CFM at \_\_\_Density and \_\_\_Temp.}$$

Pressures in a Ventilation and Fan System Summary

- Fans have obvious and hidden hazards.
- The fan provides the differential pressure energy to the system to create airflow.
- Pressures in an air system are:
  - P_s – Static Pressure
  - P_t – Total Pressure ($P_t = P_s + P_v$)
  - P_v – Velocity Pressure (ΔP_s and P_t)
  - Pressures changing throughout system.
- Pressure Losses for all system elements should be considered.
  - Hoods, Ducts, Elbows, Junctions, Conditioning Equipment, Transitions, Discharges
  - Losses are fraction(s) of velocity pressure.
- Velocity through system can be calculated.
- Velocity pressure can be calculated.

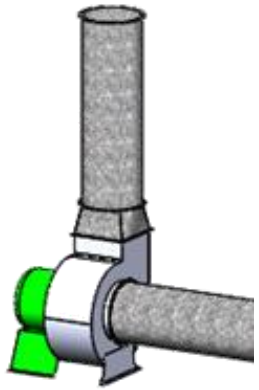

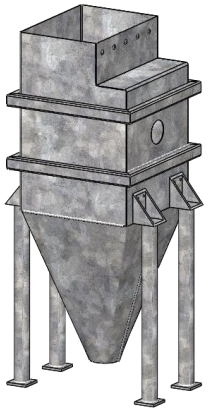

$$Element\ Loss = F_{element} \cdot P_{v_{element}}$$

$$Q = V \cdot A \quad V = \frac{Q}{A} \quad A = \frac{Q}{V}$$

$$P_v = \left[\frac{V}{1097}\right]^2 \cdot \rho \qquad \left(in\ wg, f/m, \frac{lbm}{f^3}\right)$$

$$P_v = \frac{V^2 \cdot \rho}{2} \qquad (Pa, m/s, kg/m^3)$$

AMCA Technical Seminar
Introduction to Fans and Systems Topics

Date	Topics
Week 1	Fan and System Curves Pressure Considerations in Fan Systems Live introduction to online on-demand Simplified affinity laws Motors
Week2	Centrifugal & Axial Fan types Losses in Elbows and Ducts Fan-System Controls

Date	Topics
Week 3	Power and Efficiency of Fans System Effect Power and Efficiency of Fans Advanced Affinity Laws
Week 4	Fan Selection Certified Ratings Wrap up Review Final Questions

Resources

- **AMCA International**: *www.amca.org*
- **ANSI/AMCA Standards:** *www.amca.org/store* (available for purchase)
  - 210-16: Laboratory Methods of Testing Fans for Certified Aerodynamic Performance Rating (ASHRAE 51-16)
- **AMCA Publications**: *www.amca.org/store*
  - 200-02 (R2011) – Air Systems
  - 201-02 (R2011) – Fans and Systems
  - 410-02 (R2009) – Recommended Safety Practices

Q & A

Contact Information
- William Howarth: whowarth@vfcsintl.com
- Ron Wroblewski: ron@productiveenergy.com

Survey QR Code:

www.amca.org

Thank you for your time!

To receive PDH credit for today's educational session, you must complete the online evaluation, either via the QR code or a link, which will be emailed to you 2 weeks of this program.

PDH credits and participation certificates will be issued electronically within 30 days, once all attendance records are checked and the completed online evaluations are received.

Attendees will receive an email at the address provided on your 2023 AHR Expo registration, listing the total credit hours awarded and a link to a printable certificate of completion.

If you have any questions, please contact Lisa Cherney, Education Manager, at AMCA International (*lcherney@amca.org*).